TOTO

Specification Sheet

TCW05SL

IDR 2,980,000.00

Eco-Washer With Long Elbow

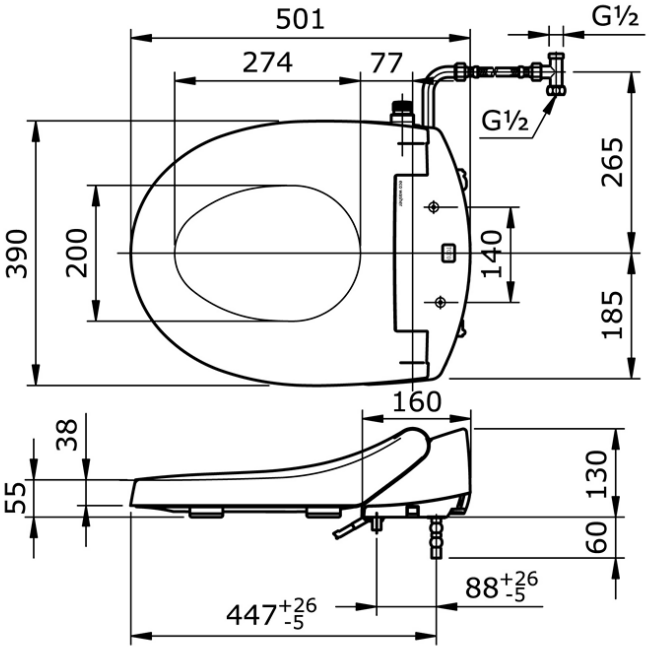

Some products may not be available in your area
Prices indicated are manufacturer's suggested retail price, prices may change anytime without notice.
Please check with your nearest reseller for updated prices.
Prices shown for lavatory does not include faucet.